# In Ground Passenger
# Elevation & Planview

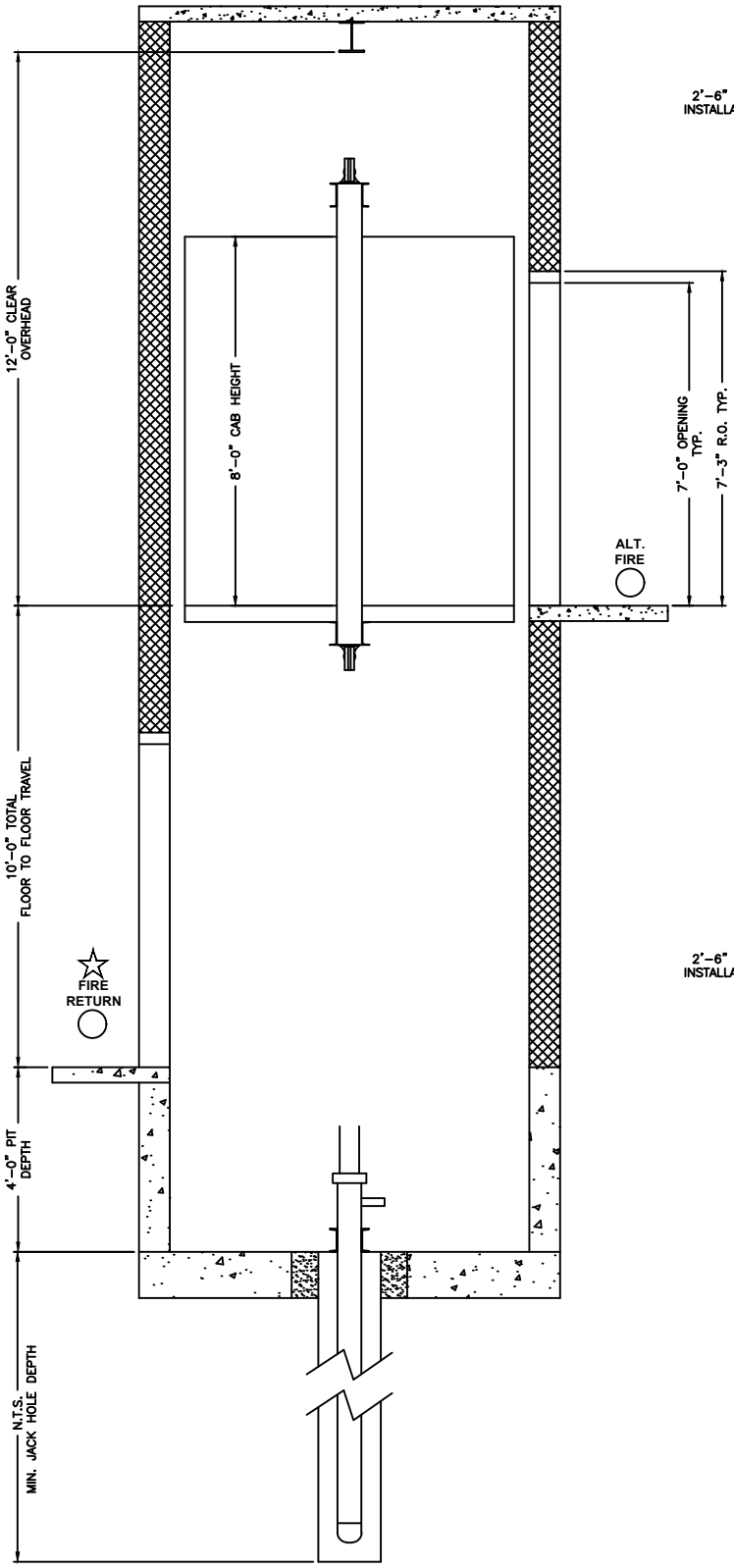


ELEVATION VIEW HOISTWAY

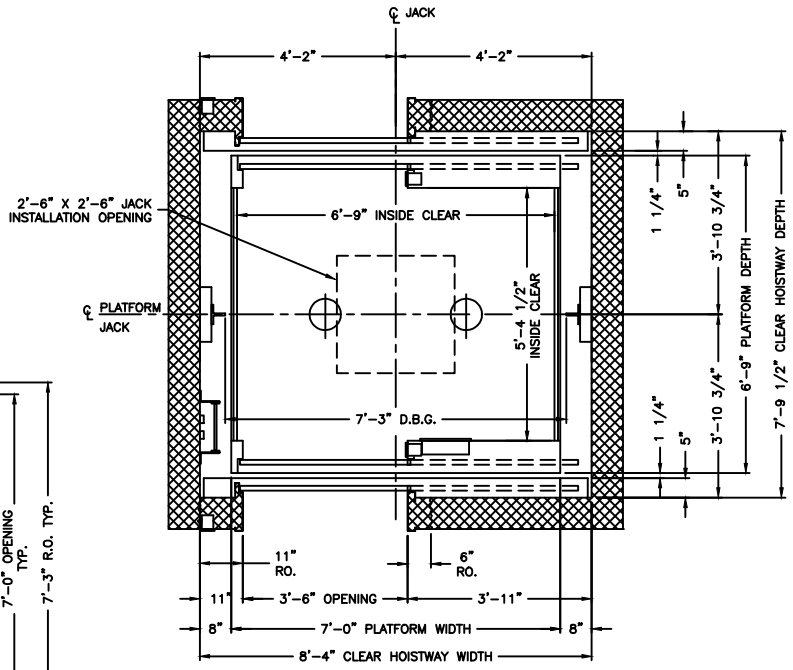


SIDE OPENING PLANVIEW

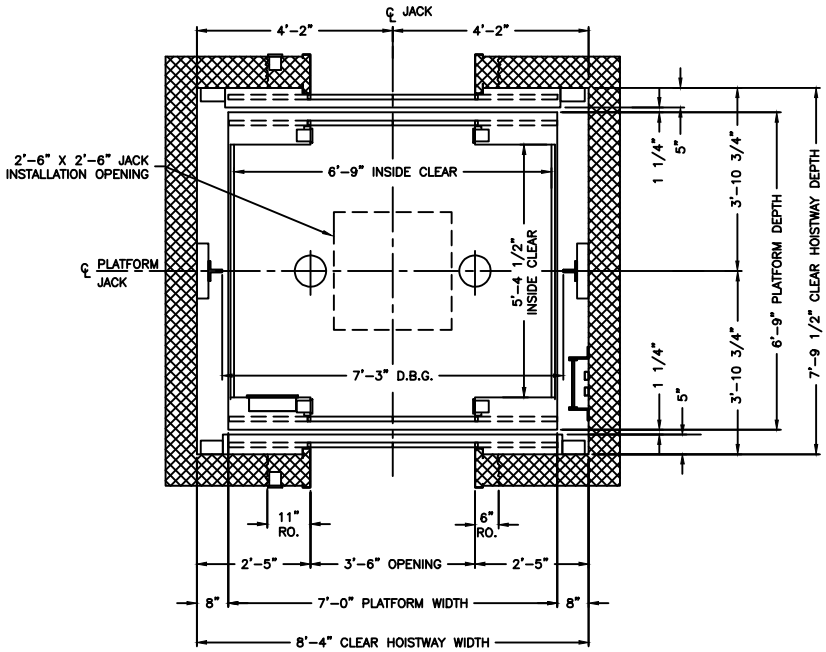


CENTER OPENING PLANVIEW

## 3500# CAPACITY F/R